ML® SYSTEM

FOTOVOLTAIC

CAR PARK ROOFING

# CARPORT

GARDEN CANOPY

# PERGOLA

# LINE OF PRODUCTS
# PERGOLA

An intelligent house, equipped with modern management systems, deserves a smart, ecological source of electricity.

Solar terrace roofing is a perfect combination of aesthetics and functionality. Aparrt from protection against weather conditions, such as sunlight, rain or snow, the canopy integrated with solar modules generates green energy that is environmentally friendly and **allows to reduce household electricity bills**. The photovoltaic pergola is an alternative for people who, due to aesthetic reasons or the limited space, do not want to install a ground photovoltaic installation.

Photovoltaic modules placed on the terrace cover generate power from 3.5 to 5.5 kW (depending on the modules used). The pergola is adapted to withstand standard snow and wind loads, and moreover, the modules can be equipped with a self-deicing, snow removing function (NoFrost).

The possibility of adjusting the degree of translucency of the roof modules and optional LED lighting allow for full personalization of the product.

The pergola structure is made of durable aluminum profiles that can be painted in any color from the RAL palette, mounted on a prefabricated or located on-site foundation.

The original design of our product is an attractive addition, giving a modern and prestigious look to the client's investment.

# PERGOLA

# PERGOLA
# **PRESTIGE**

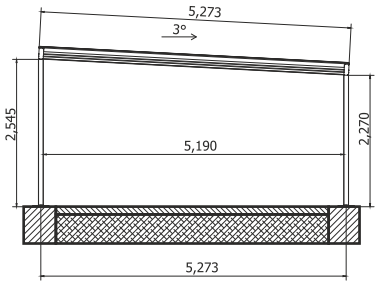


VIEW FROM THE HIGHER SIDE

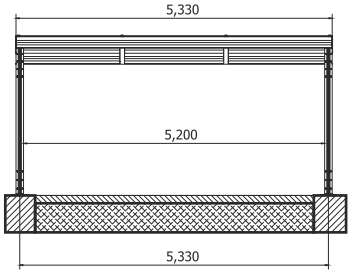


## PRODUCED ENERGY* 3,88 MWh/annually
## UNIT POWER 156,6 Wp/m²

Standard includes: aluminum structure, transparent glass/glass photovoltaic modules/ inverter, electrical protection, ground fixing elements, weatherproof silicone, assembly instructions, packed in transport crates.

* (for the Rzeszów location)

# PERGOLA

**PERGOLA PRESTIGE is a photovoltaic terrace roof that combines aesthetics with functionality.** Modern design will give the terrace a unique look, and the precision of workmanship will guarantee comfort and safety for you and your loved ones. **PERGOLA PRESTIGE not only generates environmentally friendly green energy, but also provides protection against external factors.**

Depending on the customer's requirements, the power of the photovoltaic system can be up to 4.275 kWp.

Aluminum structure in RAL 7016 color or on individual customer request in any of the basic RAL palette.

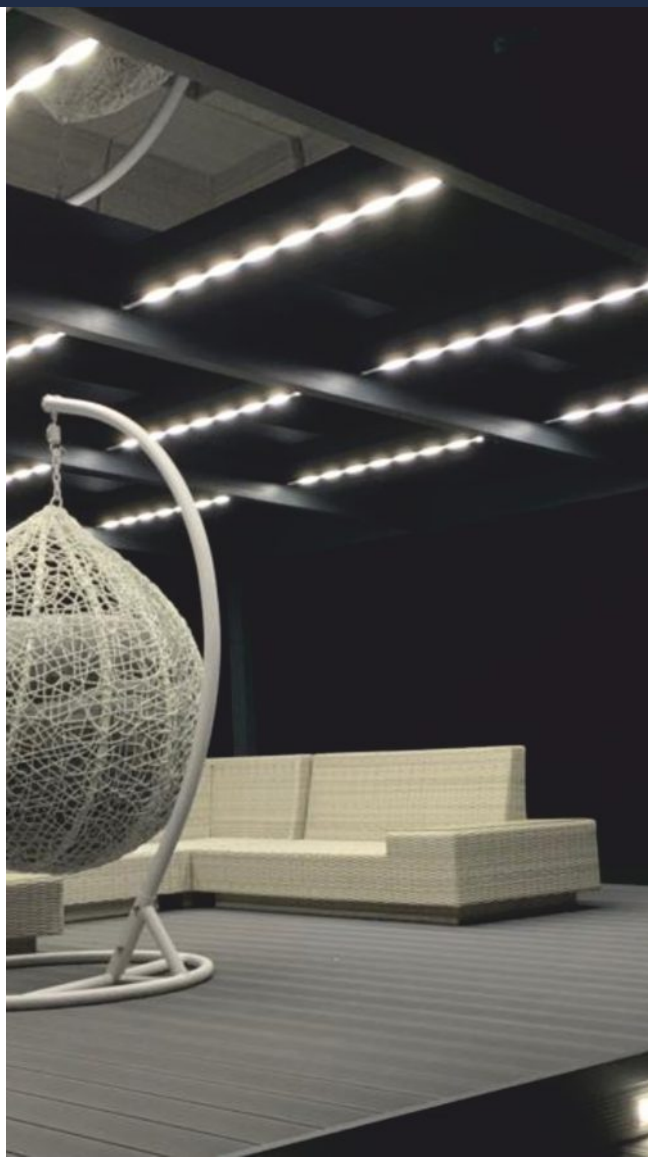

## Optional extras:

**Dual USB port**
for charging mobile devices

**Phase power supply**
can be add into the construction as a sealed 230VAC network socket

**Self-cleaning**
increases modules resistance to adhesion of dust, and other stains

**Smart Light**
modules with integrated LED lighting, operating in ON / OFF mode or in DIMM mode with variable intensity

**NoFrost**
heated modules to prevent the retention of snow cover and icicles

**Heating**
by radiant heat to a temperature of 70 ° C will ensure comfort even on cold days.

**Laser Engravings** additional visual and light effect

## Technical parameters

| | |
|---|---|
| Width | 5330 [mm] |
| Lenght | 5273 [mm] |
| Height | 2545 [mm] / 2270 [mm] |
| Number of modules | 15 pieces |
| Module dimensions | 1030 x 1768 [mm] |
| The axial spacing of foundations | 5330 x 5273 [mm] |

## Electrical parameters

| | |
|---|---|
| Rated power (PMPP) | 4275 [Wp] |
| Max. Permitted voltage (per IEC) | 1000 [V] |
| Produced Energy* | 3,88 [MWh] |
| AC Voltage | 400/230 [V] |
| Frequency | 50/60 [Hz] |
| Light transparency | around 20% |

## Strength according to Eurokod standards

| | |
|---|---|
| Snow | 1,5 [kN/m$^2$] |
| Wind (pressure-suction) | 30 [m/s] |

It is possible to use reinforcements in the event of higher loads.

# PERGOLA
# **SUNENERGY**

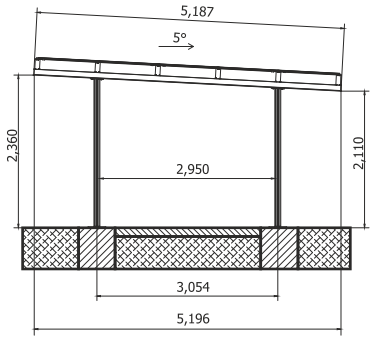


## PRODUCED ENERGY * 3,54 MWh/annually
## UNIT POWER 136 Wp/m²

Standard includes: aluminum structure, transparent glass/glass fotovoltaic modules/ inverte, electrical protection,ground fixing elements, watherproof silicone,mounting instructions, packed in transport crates.

* (for the Rzeszów location)

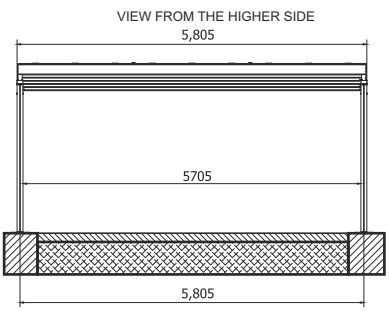

# PERGOLA

Ergonomic aluminum construction of the **PERGOLA SUNENERGY** together with photovoltaic glass/glass modules ensures transparency, and the precision of workmanship will guarantee safety for you and your loved ones.

**PERGOLA SUNENERGY** provides protection against external factors, but most of all it produces green energy that is environmentally friendly.

Depending on the requirements, it can have a photovoltaic installation power of up to 3.9 kWp.

Aluminum structure in the basic color RAL 7016 or any other color from the basic RAL palette on request.

## Optional extras:

**Dual USB port**
for charging mobile devices

**Phase power supply**
can be add into the construction as a sealed 230VAC network socket

**Self-cleaning**
increases modules resistance to adhesion of dust, and other stains

**Smart Light**
modules with integrated LED lighting, operating in ON / OFF mode or in DIMM mode with variable intensity

**NoFrost**
heated modules to prevent the retention of snow cover and icicles

**Heating**
by radiant heat to a temperature of 70 ° C will ensure comfort even on cold days.

**Laser Engravings** additional visual and light effect

## Technical parameters

| | |
|---|---|
| Width | 5805 [mm] |
| Lenght | 5196 [mm] |
| Height | 2360 [mm] / 2110 [mm] |
| Number of modules | 15 pieces |
| Module dimensions | 986 x 1940 [mm] |
| The axial spacing of foundations | 5805 x 3054 [mm] |

## Electrical parameters

| | |
|---|---|
| Rated power (PMPP) | 3900 [Wp] |
| Max. Permitted voltage (per IEC) | 1000 [V] |
| Produced Energy* | 3,54 [MWh] |
| AC Voltage | 400/230 [V] |
| Frequency | 50/60 [Hz] |
| Light transparency | around 30% |

## Strength according to Eurokod standards

| | |
|---|---|
| Snow | 1,2 [kN/m$^2$] |
| Wind (pressure-suction) | 30 [m/s] |

It is possible to use reinforcements in the event of higher loads.

# PERGOLA
# **FRAME**

PRODUCED ENERGY * 5,05 MWh/annually
UNIT POWER 190 Wp/m²

Standard includes: aluminium structure, transparent glass/glass photovoltaic modules/ inverter, electrical protection, ground fixing elements, weatherproof silicone, mounting instructions, Packed transport crates.

* (for the Rzeszów location)

# PERGOLA

Functional **PERGOLA FRAME** will be the best choice wherever power and price are the first priority. A solid structure fits in with modern minimalism, and the used photovoltaic modules are an alternative or supplement to roof or ground structures.

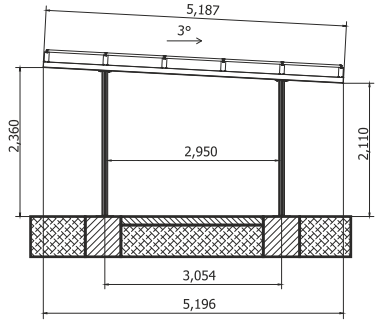


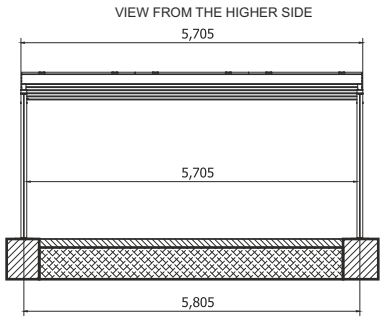


## Technical parameters

| | |
|---|---|
| Width | 5705 [mm] |
| Lenght | 5196 [mm] |
| Height | 2360 [mm] / 2110 [mm] |
| Number of modules | 15 pieces |
| Module dimensions | 992 x 1960 [mm] |
| The axial spacing of foundations | 5805 x 3054 [mm] |

## Electrical parameters

| | |
|---|---|
| Rated power (PMPP) | 5550 [Wp] |
| Max. Permitted voltage (per IEC) | 1000 [V] |
| Produced Energy* | 5,05 [MWh] |
| AC Voltage | 400/230 [V] |
| Frequency | 50/60 [Hz] |

## Strength according to Eurokod standards

| | |
|---|---|
| Snow | 1,2 [kN/m$^2$] |
| Wind (pressure-suction) | 30 [m/s] |

It is possible to use reinforcements in the event of higher loads.

# REALISATIONS

# PERGOLA

# LINE OF PRODUCTS
# CARPORT

In order to meet the new trend of electromobility, ML System has introduced to the market parking shelters adapted to the needs of electric cars, plug-in hybrids and all electric mobility such as mopeds, bicycles or electric scooters.

Carport, photovoltaic roofing of parking spaces, is a functional and aesthetic solution designed for city parking lots, car and bicycle shelters, parking spaces for scooters and electric scooters. It is a product that can be adapted to roofing projects for single parking spaces as well as multi-parking spaces. The use of solar energy to power a car or other electrical devices in the building will save on electricity costs, without harming the natural environment.

The roof structure is made in a sealed option, protecting cars against sunlight and rainfall, or in the form of a cascade or lamellas.

The combination of modules with the NoFrost function eliminates the need to remove snow from the cover, prevents the formation of icicles that could damage a person or a vehicle, and enables the production of electricity in the winter months (in periods when standard roofs are covered with snow).

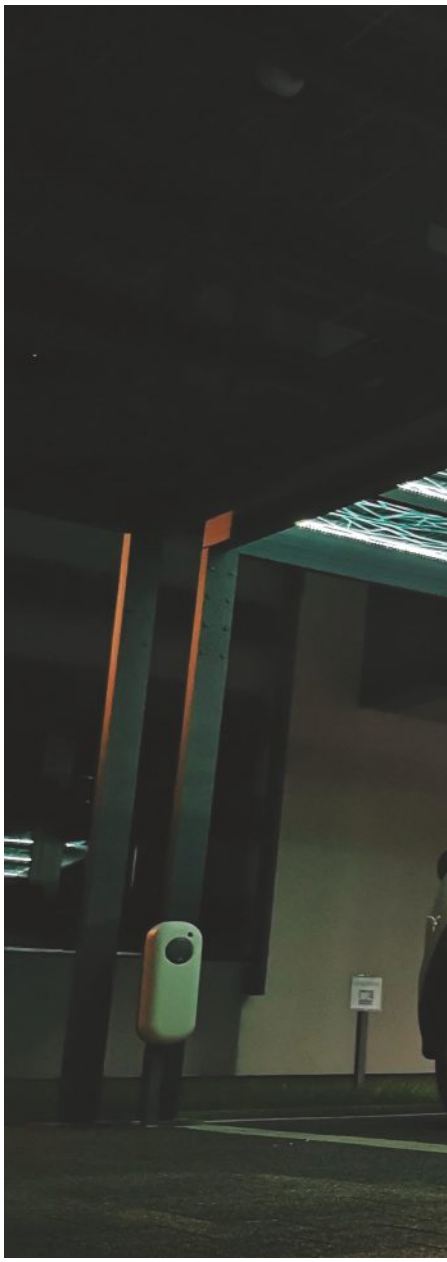

# CARPORT

# CARPORT
# **PRESTIGE**

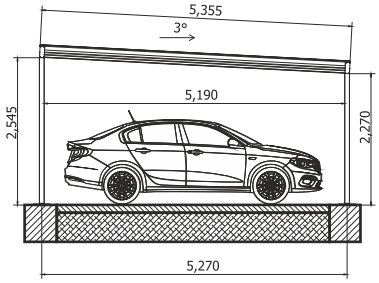


## THE AMOUNT OF PRODUCED ENERGY* 3,88 MWh/annually
## UNIT POWER 156,6 Wp/m²

Stanard contains: aluminium construction, translucent photovoltaic modules of the glass/glass type, inverter, electrical protection, ground fixing elements, weatherproof silicone, mounting instruction, packed in transport crates.

* (for the Rzeszów location)

VIEW FROM THE HIGHER SIDE

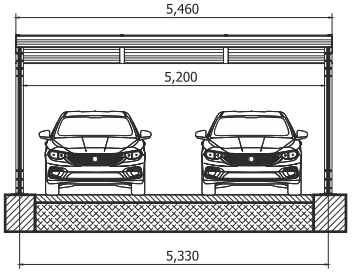

# CARPORT

**CARPORT PRESTIGE** is a photovoltaic roofing for two passenger cars, protecting against weather conditions and reducing UV radiation harmful to paint. It will ensure the comfort of use and the safety of your vehicle.
Following the green energy generation trend, it will provide energy for you and your electric vehicles.

## Optional functionalities:

**Electric vehicle charger**

**Self-Cleaning**
increased resistance to adhesion of dust, and other stains

**Smart**
Light Integrated LED lighting working in ON/OFF mode with adjustable intensity in DIMM mode.

**NoFrost**
heated modules prevent the snow cover and icycles.

**Laser engavings** additional visual aesthetical effect

## Technical parameters

| | |
|---|---|
| Width | 5460 [mm] |
| Lenght | 5355 [mm] |
| Height | 2545 [mm] / 2270 [mm] |
| The amount of PV modules | 15 pieces |
| PV module dimensions | 1030 x 1768 [mm] |
| Axial spacing of foundations | 5330 x 5270 [mm] |

## Electrical parameters

| | |
|---|---|
| Rated power (PMPP) | 4275 [Wp] |
| Max. Permitted voltage (per IEC) | 1000 [V] |
| Produced Energy* | 3,9 [MWh] |
| AC Voltage | 400/230 [V] |
| Frequency | 50/60 [Hz] |
| Light Transmittance | around 20% |

## Durability according to Eurokod standards

| | |
|---|---|
| Snow | 1,5 [kN/m$^2$] |
| Wind (pressure-suction) | 30 [m/s] |

It is possible to use reinforcements in the event of higher loads.

# CARPORT
# **SUNENERGY**

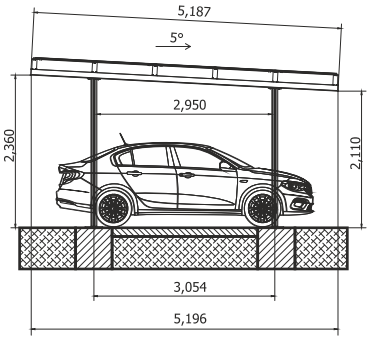


## THE AMOUNT OF PRODUCED ENERGY* 3,54 MWh/annually
## UNIT POWER 136 Wp/m²

Standard contains: aluminium construction, translucent photovoltaic modules of the glass/glass type, inverter, electrical protection, ground fixing elements, weatherproof silicone, mounting instruction, packed in transport crates.

* (for the Rzeszów location)

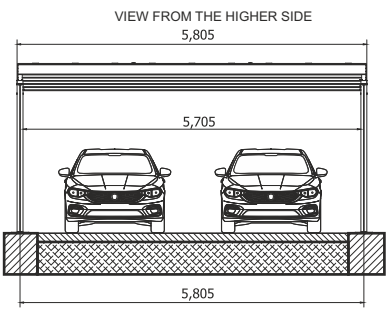

# CARPORT

The ergonomic aluminum structure of **CARPORT SUNENERGY** together with glass / glass photovoltaic modules ensures transparency and protects vehicles against excessive heating. It will guarantee safety against weather conditions for your vehicles, and equipped with an electric car charger, it will provide the required electricity and protect the vehicles against harmful UV radiation. In the standard version, the power of a photovoltaic installation up to **3.9 kWp**.
Aluminum structure in the basic color RAL 7016.

## Optional extras:

**Electric vehicle charger**

**Self-Cleaning**
increased resistance to adhesion of dust, and other stains

**Smart**
Light Integrated LED lighting working in ON/OFF mode with adjustable intensity in DIMM mode.

**NoFrost**
heated modules prevent the snow cover and icycles.

**Laser engavings** additional visual aesthetical effect

## Technical parameters

| | |
|---|---|
| Width | 5905 [mm] |
| Lenght | 5187 [mm] |
| Height | 2360 [mm] / 2110 [mm] |
| Number of modules | 15 pieces |
| Module dimensions | 986 x 1940 [mm] |
| The axial spacing of foundations | 5805 x 3050 [mm] |

## Electrical parameters

| | |
|---|---|
| Rated power (PMPP) | 3900 [Wp] |
| Max. Permitted voltage (per IEC) | 1000 [V] |
| Produced Energy* | 3,54 [MWh] |
| AC Voltage | 400/230 [V] |
| Frequency | 50/60 [Hz] |
| Light Transmittance | around 30% |

## Durability per Eurokod norms

| | |
|---|---|
| Snow | 1,2 [kN/m$^2$] |
| Wind (pressure-suction) | 30 [m/s] |

It is possible to use reinforcements in the event of higher loads.

# CARPORT
# **FRAME**

## THE AMOUNT OF PRODUCED ENERGY* 5,05 MWh/year
## UNIT POWER 190 Wp/m²

Standard contains: aluminium construction, translucent photovoltaic modules of the glass/glass type, inverter, electrical protection, ground fixing elements, weatherproof silicone, mounting instruction, packed in transport crates

* (for the Rzeszów location)

# CARPORT

This is a parking solution in which power and yield are the most important parameters. Solid performance will provide the necessary protection against weather conditions and the safety of your vehicles.
The raw structure of the car park roof perfectly fits in with modern minimalism and the yields will be an alternative to roof structures.

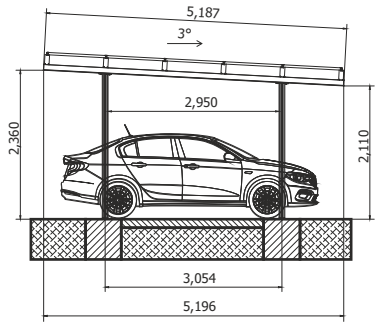


VIEW FROM THE HIGHER SIDE

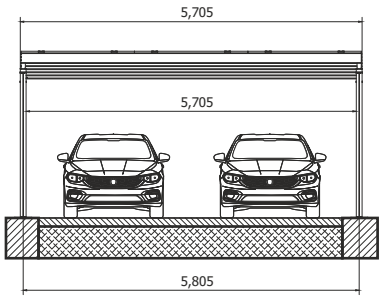


## Technical parameters

| | |
|---|---|
| Width | 5905 [mm] |
| Lenght | 5196 [mm] |
| Height | 2360 [mm] / 2110 [mm] |
| The amount of PV modules | 15 pieces |
| PV module dimensions | 992 x 1960 [mm] |
| The axial spacing of foundations | 5805 x 3050 [mm] |

## Electrical parameters

| | |
|---|---|
| Rated power (PMPP) | 5550 [Wp] |
| Max. Permitted voltage (per IEC) | 1000 [V] |
| Produced Energy* | 5,05 [MWh] |
| AC Voltage | 400/230 [V] |
| Frequency | 50/60 [Hz] |

## Durability per Eurokod norms

| | |
|---|---|
| Snow | 1,2 [kN/m$^2$] |
| Wind (pressure-suction) | 30 [m/s] |

It is possible to use reinforcements in the event of higher loads.

# REALISATIONS

Construction of the roofing made of aluminium profiles of the highest purity and high anti-corrosive class. The roofing is made with Photovoltaic modules (PV) designed to use the maximum potential of the PV technology. Equipped with the modules of the highest generation of the highest performance and durability with the possibility of customisation of translucency adjusted to meet the agglomerational solutions. fitted with the automatic mode.

The whole unit is resistant to weather conditions as well as has high resistance to mechanical damage..

It can have any color of the RAL palette and be configured with additional modules and functions such as LED lighting, monitoring, self-cleaning, NoFrost etc. The roofing will be a great solution for single as well as multi-space Constructions.

# CARPORT

# CUSTOMIZED REALISATIONS

# CARPORT

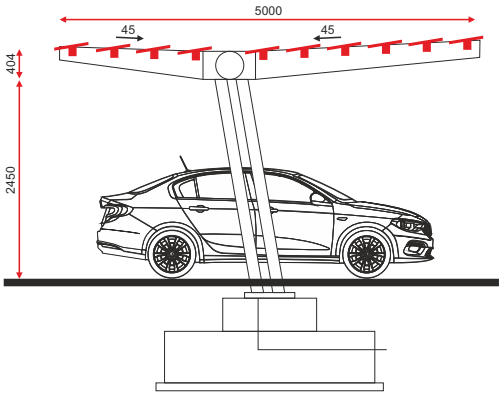


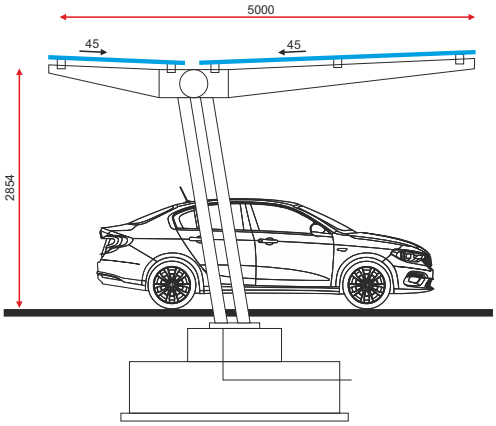

# CARPORT

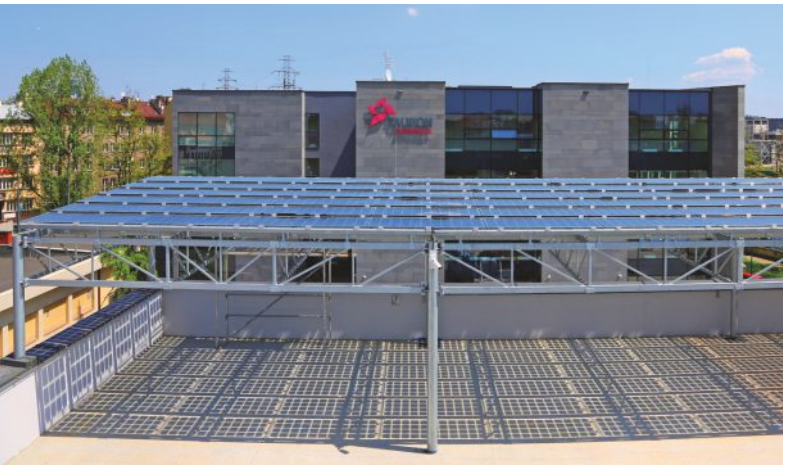

Legal Note

The information contained within the catalogues, folders, leaflets or adverts of ML System do not consitute an offer in the sense of Civil code. The information referring to the dimensions, weights, prices and other parameters as well as illustrations, descriptions and drawings contained or attached to the marketing materials of ML System are only informative unless specified differently. The differences in the final look of the product in the catalogues, folders, leaflets and adverts and their real appearance cannot form the basis for the refund claims of the purchased asortment. The prices contained in the catalogues, folders, leaflets and adverts of ML System are not a recommended retail price.

# garden canopy PERGOLA
# car park roofing CARPORT

POLISH PRODUCER since 2007

ML SYSTEM Spółka Akcyjna
Zaczernie 190 G, 36-062 Zaczernie
tel. + 48 17 77 88 266
e-mail: biuro@mlsystem.pl
www.mlsystem.pl